AC Axial Fan & Blower

*All products are **RoHS** compliance.

SUNON®

Contents

Sunon AC Axial Fan & Blower

			Page
	Engineering Information		page 02
	Fan Model Numbering System		page 04
	AC Fan Series	Air Flow (CFM)	
NEW	60x60x25mm (MagLev Motor AC Fan)	17.5~18	page 05
NEW	70x70x25mm (MagLev Motor AC Fan)	28~29	page 06
NEW	80x80x25 mm (MagLev Motor AC Fan)	40~41	page 07
	80x80x25mm	17~22	page 08
	80x80x38mm	23~31	page 09
NEW	92x92x25mm (MagLev Motor AC Fan)	52~54	page 10
	92x92x25mm	21~37	page 11
	120x120x25mm (115V)	46~80	page 12
	120x120x25mm (220-240V)	46~80	page 13
	120x120x38mm (115V)?	70~117	page 14
	120x120x38mm (220-240V)	70~117	page 15
	120x120x38mm (Plastic Frame)	85~100	page 16
NEW	120x120x38mm (New Type)	95~117	page 17
	120x120x38mm (Dual AC Voltage)	95~115	page 18
	171x151x51mm	180~200	page 19
	171x151x51mm (Alveolate Motor)	203~239	page 20
	Φ171x51mm (Alveolate Motor)	203~239	page 21
	176x176x89mm (Alveolate Motor)	315~355	page 22
NEW	Φ254x89mm (Alveolate Motor)	425~870	page 23
	120x120x31mm (Blower)	20~22	Page 24

Certification

Safety

VDE-Reg-Nr.1350

MagLev Frequency-Switching Motor (MagLev AC Fan)

Low Power Consumption Super High Airflow Smart Multi-functional Controls

Sunon MagLev AC Fans with MagLev Frequency-Switching Motors, not only contain the three features of low noise, high temperature endurance, and super long life inherited from the MagLev motor design, but also are superior in low power consumption, super high airflow, and smart multi-functional controls. By adopting the design principle of frequency-switching circuit controls, Sunon MagLev AC Fans are the best solution for AC-powered cooling.

MagLev AC Fan Structure

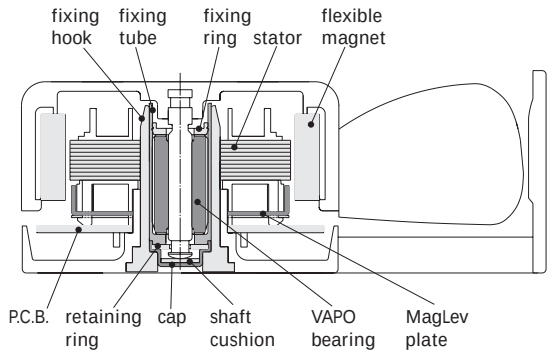

MagLev AC Fans compared with conventional AC fans

MagLev AC Fan

1. Due to the patented design, Sunon MagLev AC Fan's hub area is significantly reduced, yielding a larger impeller which can offer double the airflow of conventional AC fans.
2. Rotational speed can be adjusted per customer's requirement.
3. Frequency-switching circuit design can reduce the power consumption to less than half that of conventional AC fans. With an input voltage of 115V/50Hz, the 80mm AC fans offer power consumptions of only 3.6W.
4. Provides output signal for rotational speed detection.
5. The MagLev design, with its compact size features low noise.
6. By rotating with full exertion in a fixed operational orbit, the MagLev AC fan eliminates vibration and prolongs lifespan.
7. MagLev AC Fans with its novel technology goes beyond the norm and provides unlimited possibilities for customers' future demands.

Conventional AC fan

1. Limited by the motor-wire wrapping process, the resulting motor hube is larger than MagLev AC fans.
2. Limited rotational speed, can't adjust to customers demand for the highest rotational speed.
3. When directly connected to AC power supplies, the power consumption is higher.
4. It's difficult for conventional motor design to provide output signal for torational speed detection.
5. Conventional AC fans have encountered a bottleneck in their technical development, and therefore it is difficult to make any further break through.

Alveolate Motor AC fan series with automatic motor-wire wrapping technology ensures stable performance of high wind volume, low acoustic noise, also available with functions of dual spinning rate, and thermal cutout.

SUNON-Alveolate Motor VS. Traditional Shaded-Pole Motor

SUNON-Alveolate Motor	Traditional Shaded-Pole Motor
1. The Alveolate Motor is equipped with starting stator coils and working ones. The starting coils form a low starting voltage with the capacitors. For example, an 115VAC (the fixed voltage) Alveolate Motor can be started with 60VAC.	1. The Traditional Shaded-Pole Motor, designed with single-wire wrapping, is started by "the starting copper" and cannot be started with low voltage. An 115VAC Traditional Shaded-Pole motor will need more than 80VAC to run, 20VAC more than the Alveolate one.
2. The coils do not produce high temperature and consumes less electricity. The temperature is normally around 50℃. Therefore, the motor is always stable and reliable.	2. The Traditional Shaded-Pole Motor consumes electricity twice as much as the Alveolate Motor. It is not reliable because the temperature is usually higher than 70℃.
3. The Thermal Cutout can protect the motor.	3. The Thermal Cutout is an option.
4. The motor has a large torsion to produce high wind pressure and wind volume.	4. General wind pressure and wind volume.
5.The motor is equipped with the third wire, ready to comply with the customer's systems.	5. Without the third wire.

Model Numbering System

General AC Fan

Ex) **SF11580AT 1 08 2 H B L .GN**

MODEL SERIES
SFxxx
SPxxx
DPxxx

VOLTAGE
1 : 115 VAC
2 : 220 -240 VAC

FRAME SIZE
08 : 80 mm
09 : 92 mm
12 : 120 mm

FRAME THICKNESS
2 : 25 mm
3 : 38 mm

RoHS Compliance

TERMINALS
T : Terminal
L : Lead wire

BEARING SYSTEM
B : Ball
S : Sleeve

SPEED
X : Super
H : High
M : Middle
L : Low

New Type AC Fan

Ex) **A 1 17 5 – H B T**

MODEL SERIES
A : New AC fan series
AB : New AC blower series
MA : MagLev AC Fan series

VOLTAGE
1 : 115 VAC
2 : 220-240 VAC
3 : 380 VAC

FRAME SIZE
08 : 80 mm
09 : 92 mm
12 : 120 mm
17 : 172 mm
25 : 254 mm

FRAME THICKNESS
2 : 25 mm
3 : 31~38mm
5 : 50~51 mm
7 : 72 mm
9 : 89~90mm

TERMINALS
T : Terminal
L : Lead wire

BEARING SYSTEM
V: MagLev
S : Sleeve
B : Ball

SPEED
X : Super
H : High
M : Middle
L : Low

P/N

P/N Suffixes have the following significance :

T	: Thermal Cutout
C	: Capacitor
TC	: Alveolate Motor with Thermal Cutout and Capacitor
TC.R	: Round Frame , Alveolate Motor with Thermal Cutout and Capacitor
N	: New frame
GN	: RoHS compliance

* Alveolate Motor only available in P/N : TC model

MagLev Motor AC Fan

17.5-18 CFM

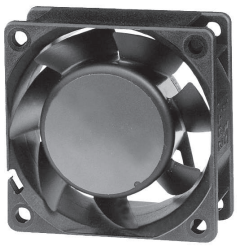

Model	P/N	Bearing (● VAPO, ○ BALL, ⦿ Sleeve)	Rating Voltage (VAC)	Freq. (Hz)	Power Current (AMP)	Power Consumption (WATTS)	Speed (RPM)	Air Flow (CFM)	Static Pressure (Inch-H_2O)	Noise (dBA)	Weight (g)
MA1062-HVL	GN	●	115	50/60	0.191/0.185	3.6/3.6	4100/4200	17.5/18	0.19/0.20	30/31	81
MA2062-HVL	GN	●	220-240	50/60	0.198/0.211	4.1/4.4	4100/4200	17.5/18	0.19/0.20	30/31	81

Frame : PBT Plastic

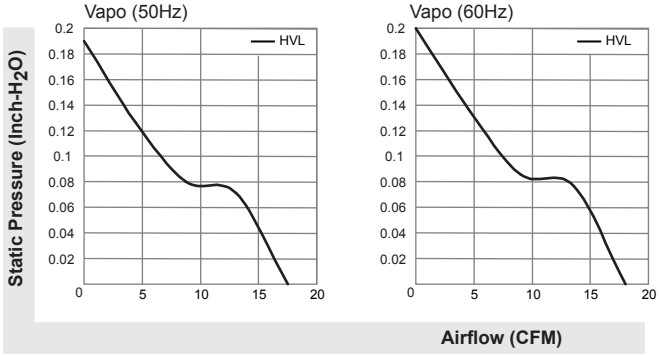

UNITS:mm

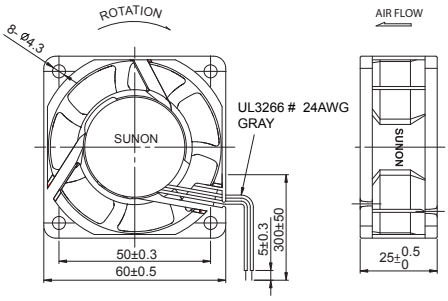

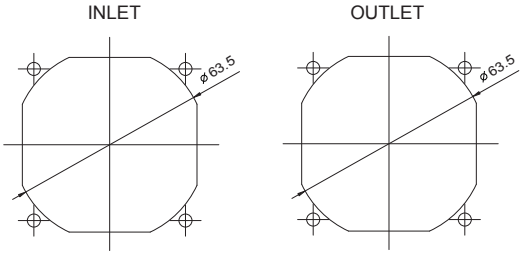

*All model could be customized on voltage or any other requirements to fit your need.
*Specifications subject to change without notice. Please Visit SUNON web site at http://www.sunon.com for update information.

MagLev Motor AC Fan

28-29 CFM

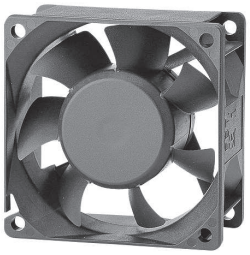

Model	P/N	Bearing (● VAPO, ○ BALL, ⦿ Sleeve)	Rating Voltage (VAC)	Freq. (Hz)	Power Current (AMP)	Power Consumption (WATTS)	Speed (RPM)	Air Flow (CFM)	Static Pressure (Inch-H_2O)	Noise (dBA)	Weight (g)
MA1072-HVL	GN	●	115	50/60	0.208/0.197	3.7/3.7	3800/3900	28/29	0.17/0.18	30/31	90
MA2072-HVL	GN	●	220-240	50/60	0.207/0.220	4.3/4.4	3800/3900	28/29	0.17/0.18	30/31	90

Frame : PBT Plastic

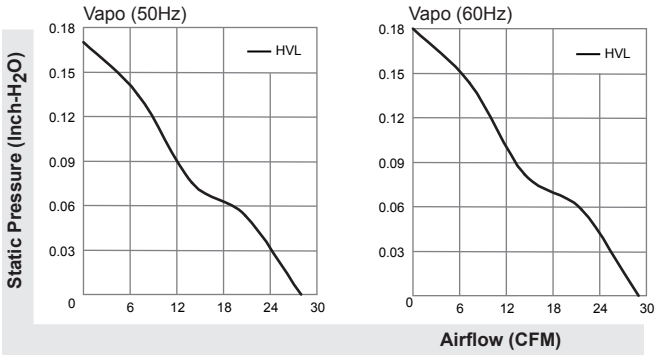

UNITS:mm

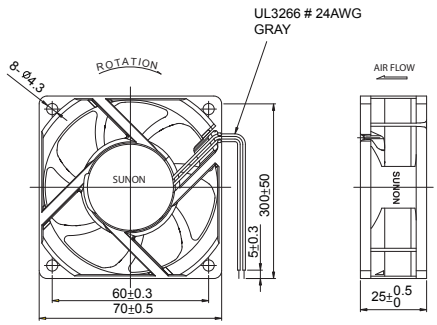

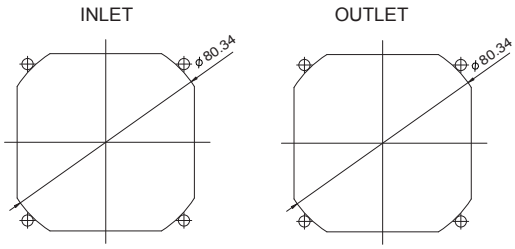

*All model could be customized on voltage or any other requirements to fit your need.
*Specifications subject to change without notice. Please Visit SUNON web site at http://www.sunon.com for update information.

MagLev Motor AC Fan

40-41 CFM

Model	P/N	Bearing (● VAPO ○ BALL ⦿ Sleeve)	Rating Voltage (VAC)	Freq. (Hz)	Power Current (AMP)	Power Consumption (WATTS)	Speed (RPM)	Air Flow (CFM)	Static Pressure (Inch-H_2O)	Noise (dBA)	Weight (g)
MA1082-HVL	GN	●	115	50/60	0.112/0.116	3.6/3.6	3200/3300	40/41	0.14/0.15	32/33	102.2
MA2082-HVL	GN	●	220-240	50/60	0.102/0.101	4.6/4.6	3200/3300	40/41	0.14/0.15	32/33	102.2

Frame : PBT Plastic

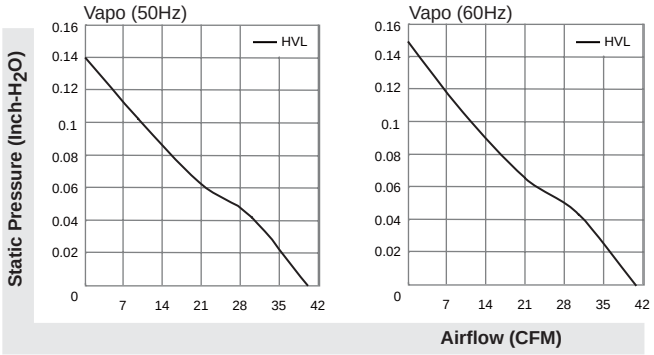

UNITS:mm

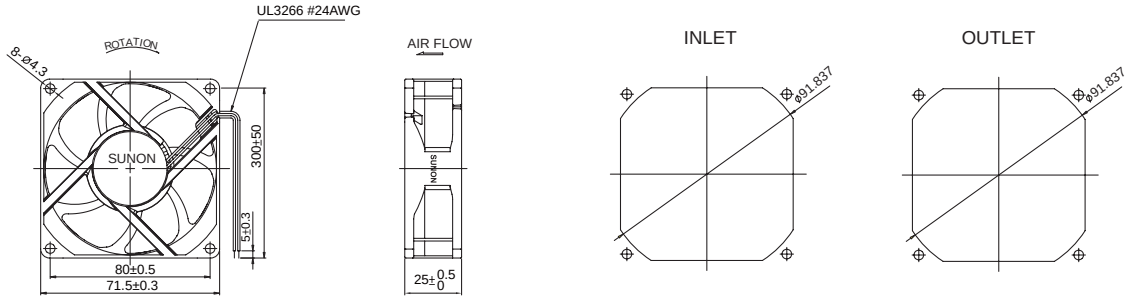

*All model could be customized on voltage or any other requirements to fit your need.
*Specifications subject to change without notice. Please Visit SUNON web site at http://www.sunon.com for update information.

80x80x25 mm

SUNON

17-22CFM

Model	P/N	Bearing ● VAPO ○ BALL ⦿ Sleeve	Rating Voltage (VAC)	Freq. (Hz)	Power Current (AMP)	Power Consumption (WATTS)	Speed (RPM)	Air Flow (CFM)	Static Pressure (Inch-H_2O)	Noise (dBA)	Weight (g)
SF11580AT	1082HSL.GN	⦿	115	50/60	0.12/0.10	12/11	2300/2750	17/21	0.12/0.18	29/33	260
SF11580AT	1082HBL.GN	○	115	50/60	0.12/0.10	12/11	2450/2900	18/22	0.13/0.19	30/34.5	260
SF23080AT	2082HSL.GN	⦿	220-240	50/60	0.07/0.07	14/13.5	2300/2750	17/21	0.12/0.18	29/33	260
SF23080AT	2082HBL.GN	○	220-240	50/60	0.07/0.07	14/13.5	2450/2900	18/22	0.13/0.19	30/34.5	260

Frame : Aluminum alloy

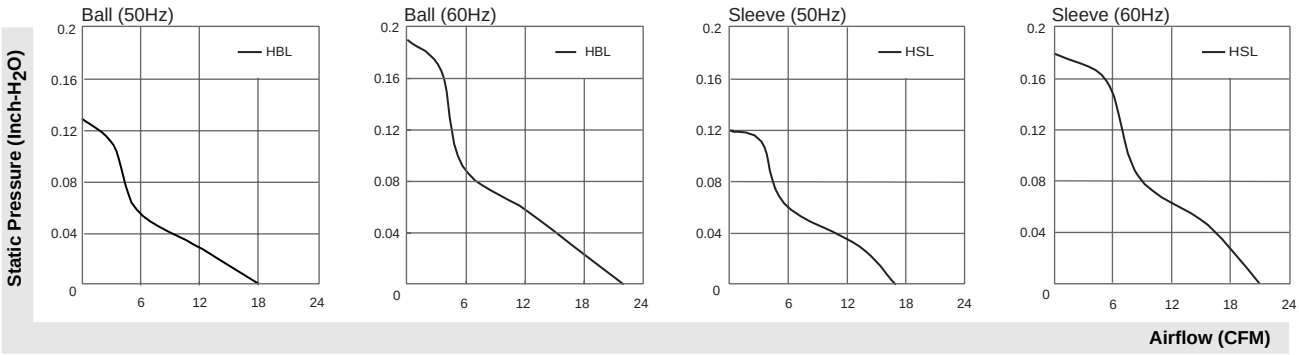

UNITS:mm

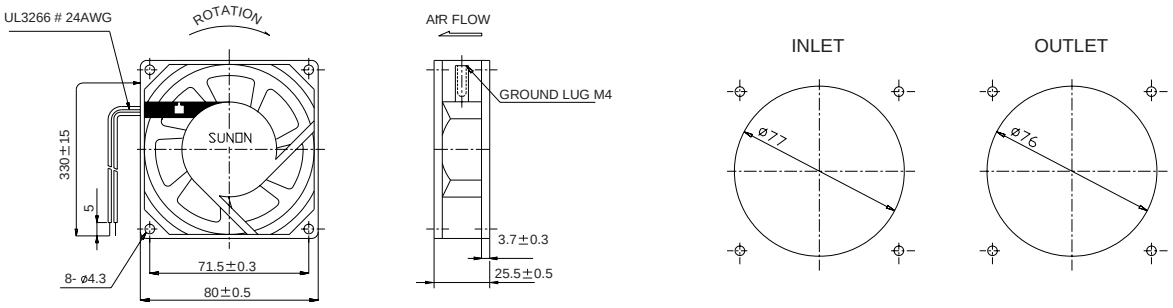

*All model could be customized on voltage or any other requirements to fit your need.
*Specifications subject to change without notice. Please Visit SUNON web site at http://www.sunon.com for update information.

80x80x38 mm

SUNON

23-31CFM

Model	P/N	Bearing ● VAPO ○ BALL ⦿ Sleeve	Rating Voltage (VAC)	Freq. (Hz)	Power Current (AMP)	Power Consumption (WATTS)	Speed (RPM)	Air Flow (CFM)	Static Pressure (Inch-H_2O)	Noise (dBA)	Weight (g)
SF11580A	1083HSL.GN	⦿	115	50/60	0.15/0.13	14/12	2300/2750	23/30	0.12/0.18	31/35	340
SF11580A	1083HBL.GN	○	115	50/60	0.15/0.13	14/12	2400/2850	24/31	0.13/0.19	32/36.5	340
SF23080A	2083HSL.GN	⦿	220-240	50/60	0.09/0.08	18/16	2300/2750	23/30	0.12/0.18	31/35	340
SF23080A	2083HBL.GN	○	220-240	50/60	0.09/0.08	18/16	2400/2850	24/31	0.13/0.19	32/36.5	340

Frame : Aluminum alloy

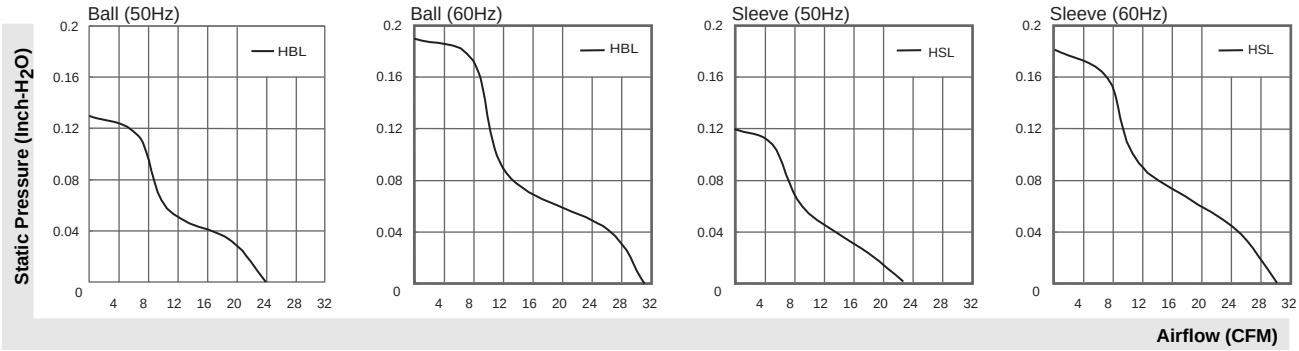

UNITS:mm

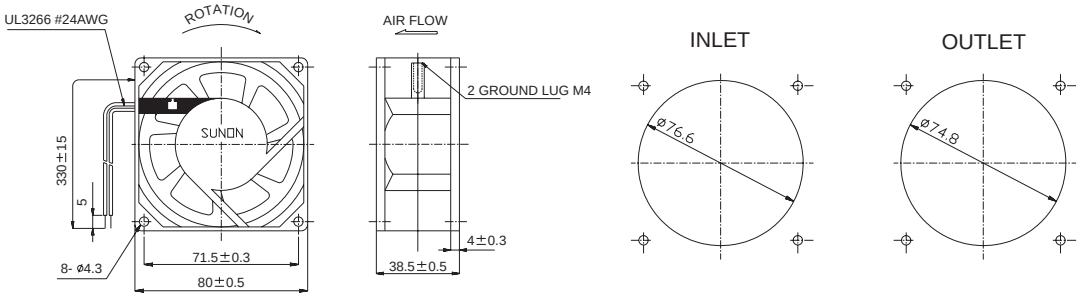

*All model could be customized on voltage or any other requirements to fit your need.
*Specifications subject to change without notice. Please Visit SUNON web site at http://www.sunon.com for update information.

MagLev Motor AC Fan

52-54 CFM

Model	P/N	Bearing (● VAPO, ○ BALL, ⦿ Sleeve)	Rating Voltage (VAC)	Freq. (Hz)	Power Current (AMP)	Power Consumption (WATTS)	Speed (RPM)	Air Flow (CFM)	Static Pressure (Inch-H_2O)	Noise (dBA)	Weight (g)
MA1092-HVL	GN	●	115	50/60	0.114/0.118	3.6/3.6	2900/3000	52/54	0.12/0.14	31/32	119.7
MA2092-HVL	GN	●	220-240	50/60	0.103/0.106	4.6/4.6	2900/3000	52/54	0.12/0.14	31/32	119.7

Frame : PBT Plastic

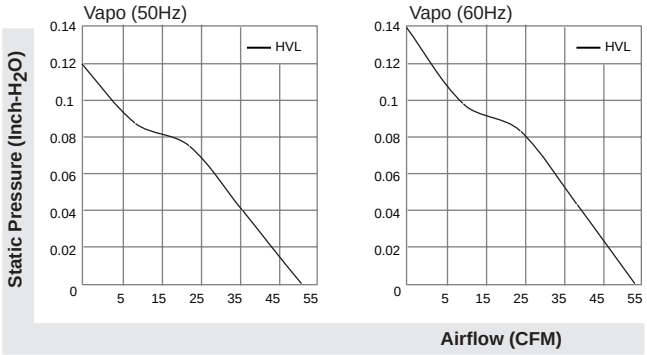

UNITS:mm

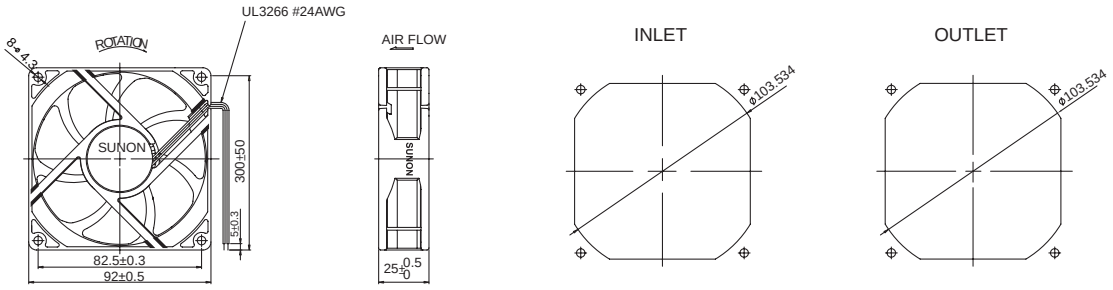

*All model could be customized on voltage or any other requirements to fit your need.
*Specifications subject to change without notice. Please Visit SUNON web site at http://www.sunon.com for update information.

92x92x25 mm

SUNON

21-37 CFM

Model	P/N	Bearing ● VAPO ○ BALL ⦿ Sleeve	Rating Voltage (VAC)	Freq. (Hz)	Power Current (AMP)	Power Consumption (WATTS)	Speed (RPM)	Air Flow (CFM)	Static Pressure (Inch-H_2O)	Noise (dBA)	Weight (g)
SF11592A	1092HSL.GN	⦿	115	50/60	0.12/0.11	13/12	2250/2750	29/36	0.12/0.18	36/39	280
SF11592A	1092HST.GN	⦿	115	50/60	0.12/0.11	13/12	2250/2750	29/36	0.12/0.18	36/39	280
SF11592A	1092MSL.GN	⦿	115	50/60	0.06/0.06	7/6	1550/1700	21/26	0.08/0.09	28/30	280
SF11592A	1092MST.GN	⦿	115	50/60	0.06/0.06	7/6	1550/1700	21/26	0.08/0.09	28/30	280
SF11592A	1092HBL.GN	○	115	50/60	0.12/0.11	13/12	2350/2850	30/37	0.13/0.19	37/40	280
SF11592A	1092HBT.GN	○	115	50/60	0.12/0.11	13/12	2350/2850	30/37	0.13/0.19	37/40	280
SF11592A	1092MBL.GN	○	115	50/60	0.07/0.06	7/6	1800/2100	23/28	0.10/0.11	31/33	280
SF11592A	1092MBT.GN	○	115	50/60	0.07/0.06	7/6	1800/2100	23/28	0.10/0.11	31/33	280
SF23092A	2092HSL.GN	⦿	220-240	50/60	0.07/0.06	14.5/14	2250/2750	29/36	0.12/0.18	36/39	280
SF23092A	2092HST.GN	⦿	220-240	50/60	0.07/0.06	14.5/14	2250/2750	29/36	0.12/0.18	36/39	280
SF23092A	2092MSL.GN	⦿	220-240	50/60	0.07/0.07	15/14	2000/2500	27/33	0.11/0.16	32/37	280
SF23092A	2092MST.GN	⦿	220-240	50/60	0.07/0.07	15/14	2000/2500	27/33	0.11/0.16	32/37	280
SF23092A	2092HBL.GN	○	220-240	50/60	0.07/0.06	14.5/14	2350/2850	30/37	0.13/0.19	37/40	280
SF23092A	2092HBT.GN	○	220-240	50/60	0.07/0.06	14.5/14	2350/2850	30/37	0.13/0.19	37/40	280
SF23092A	2092MBL.GN	○	220-240	50/60	0.07/0.07	15/14	2200/2700	28/35	0.12/0.18	35/38	280
SF23092A	2092MBT.GN	○	220-240	50/60	0.07/0.07	15/14	2200/2700	28/35	0.12/0.18	35/38	280

Frame : Aluminum alloy

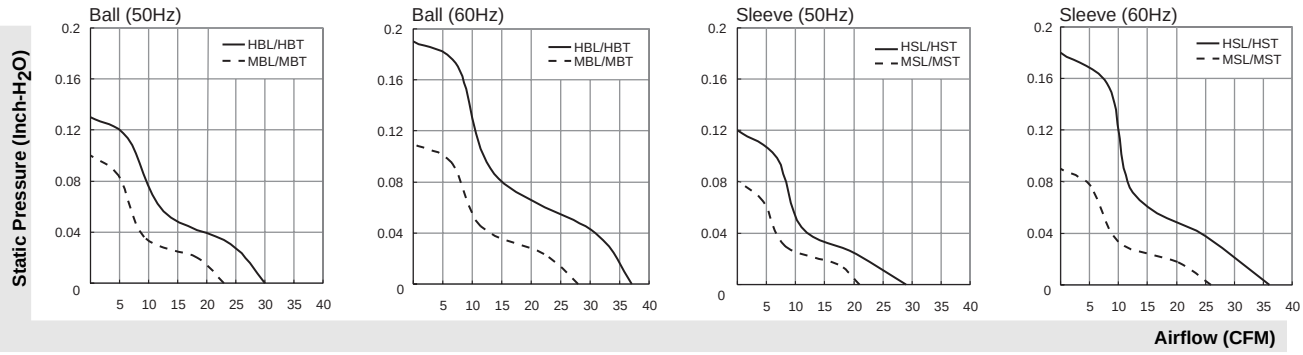

UNITS:mm

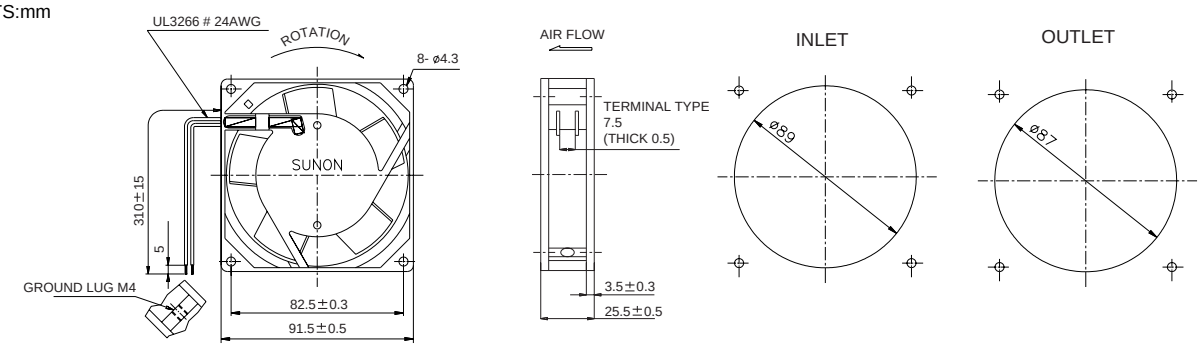

*All model could be customized on voltage or any other requirements to fit your need.
*Specifications subject to change without notice. Please Visit SUNON web site at http://www.sunon.com for update information.

120x120x25 mm

SUNON

46-80 CFM

Model	P/N	Bearing ● VAPO ○ BALL ⦿ Sleeve	Rating Voltage (VAC)	Freq. (Hz)	Power Current (AMP)	Power Consumption (WATTS)	Speed (RPM)	Air Flow (CFM)	Static Pressure (Inch-H_2O)	Noise (dBA)	Weight (g)
SP101AT	1122HSL.GN	⦿	115	50/60	0.21/0.19	19/18	2000/2300	64/78	0.13/0.16	43/46	330
SP101AT	1122HST.GN	⦿	115	50/60	0.21/0.19	19/18	2000/2300	64/78	0.13/0.16	43/46	330
SP103AT	1122LSL.GN	⦿	115	50/60	0.14/0.13	14/13	1600/1800	46/53	0.11/0.12	35/38	330
SP103AT	1122LST.GN	⦿	115	50/60	0.14/0.13	14/13	1600/1800	46/53	0.11/0.12	35/38	330
SP101AT	1122HBL.GN	○	115	50/60	0.21/0.19	19/18	2150/2500	66/80	0.14/0.17	44/48	330
SP101AT	1122HBT.GN	○	115	50/60	0.21/0.19	19/18	2150/2500	66/80	0.14/0.17	44/48	330
SP103AT	1122LBL.GN	○	115	50/60	0.12/0.11	12.5/11.5	1700/1900	47/54	0.12/0.13	37/40	330
SP103AT	1122LBT.GN	○	115	50/60	0.12/0.11	12.5/11.5	1700/1900	47/54	0.12/0.13	37/40	330

Frame : Aluminum alloy

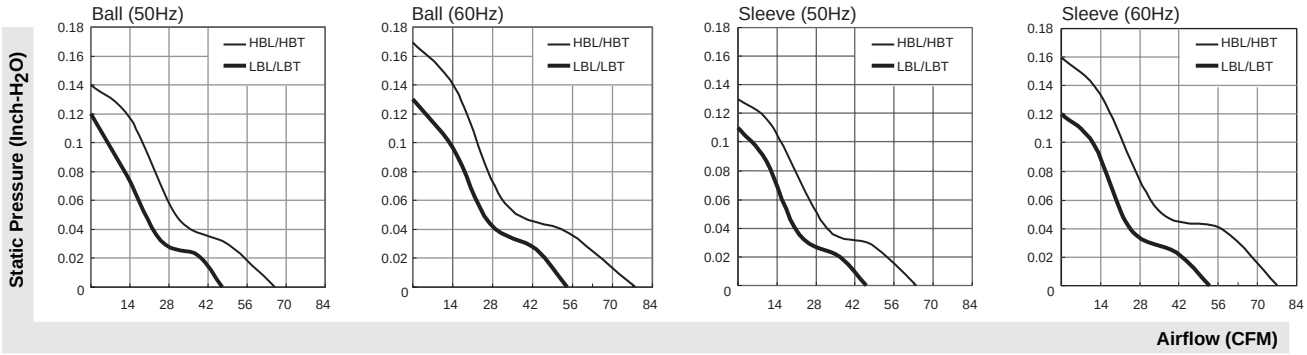

UNITS:mm

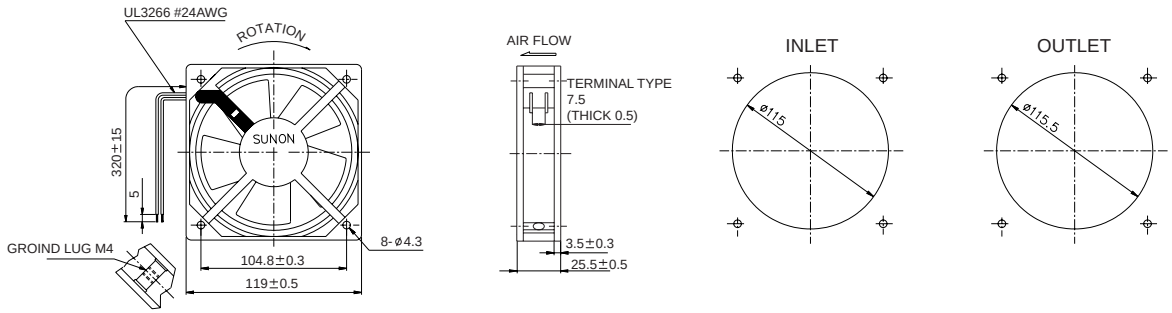

*All model could be customized on voltage or any other requirements to fit your need.
*Specifications subject to change without notice. Please Visit SUNON web site at http://www.sunon.com for update information.

120x120x25 mm

SUNON

46-80 CFM

Model	P/N	Bearing ● VAPO ○ BALL ⦿ Sleeve	Rating Voltage (VAC)	Freq. (Hz)	Power Current (AMP)	Power Consumption (WATTS)	Speed (RPM)	Air Flow (CFM)	Static Pressure (Inch-H_2O)	Noise (dBA)	Weight (g)
DP201AT	2122HSL.GN	⦿	220-240	50/60	0.10/0.09	19/19	2000/2300	64/78	0.13/0.16	43/46	330
DP201AT	2122HST.GN	⦿	220-240	50/60	0.10/0.09	19/19	2000/2300	64/78	0.13/0.16	43/46	330
DP203AT	2122LSL.GN	⦿	220-240	50/60	0.07/0.07	14/13	1600/1800	46/53	0.11/0.12	35/38	330
DP203AT	2122LST.GN	⦿	220-240	50/60	0.07/0.07	14/13	1600/1800	46/53	0.11/0.12	35/38	330
DP201AT	2122HBL.GN	○	220-240	50/60	0.10/0.09	19/18	2150/2500	66/80	0.14/0.17	44/48	330
DP201AT	2122HBT.GN	○	220-240	50/60	0.10/0.09	19/18	2150/2500	66/80	0.14/0.17	44/48	330
DP203AT	2122LBL.GN	○	220-240	50/60	0.07/0.07	14/13	1700/1900	47/54	0.12/0.13	37/40	330
DP203AT	2122LBT.GN	○	220-240	50/60	0.07/0.07	14/13	1700/1900	47/54	0.12/0.13	37/40	330

Frame : Aluminum alloy

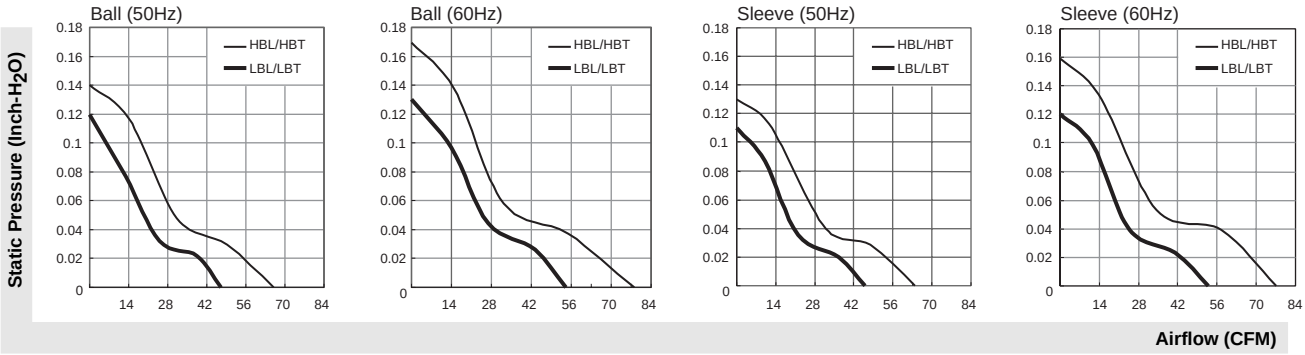

UNITS:mm

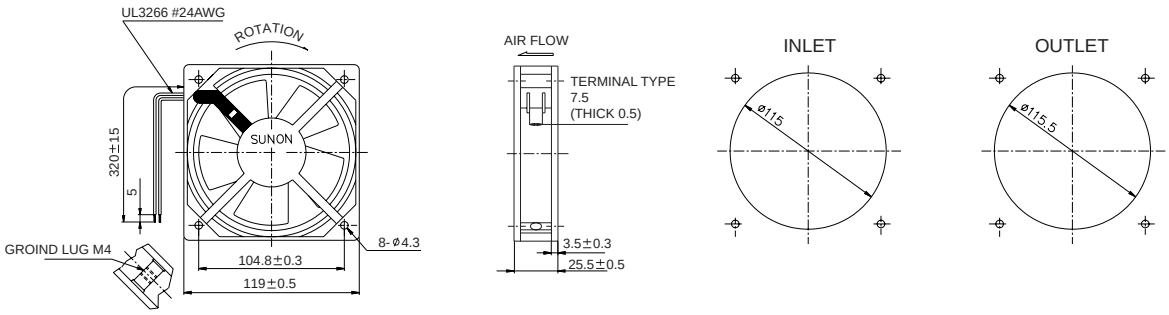

*All model could be customized on voltage or any other requirements to fit your need.
*Specifications subject to change without notice. Please Visit SUNON web site at http://www.sunon.com for update information.

120x120x38 mm

SUNON

70-117CFM

Model	P/N	Bearing ● VAPO ○ BALL ⊙ Sleeve	Rating Voltage (VAC)	Freq. (Hz)	Power Current (AMP)	Power Consumption (WATTS)	Speed (RPM)	Air Flow (CFM)	Static Pressure (Inch-H_2O)	Noise (dBA)	Weight (g)
SP100A	1123XSL.GN	⊙	115	50/60	0.26/0.24	22/20	2700/3100	95/115	0.33/0.38	44/49	550
SP100A	1123XST.GN	⊙	115	50/60	0.26/0.24	22/20	2700/3100	95/115	0.33/0.38	44/49	550
SP101A	1123HSL.GN	⊙	115	50/60	0.21/0.18	20/18	2550/2900	85/105	0.25/0.30	43/48	550
SP101A	1123HST.GN	⊙	115	50/60	0.21/0.18	20/18	2550/2900	85/105	0.25/0.30	43/48	550
SP102A	1123MSL.GN	⊙	115	50/60	0.17/0.16	15/15	2400/2600	78/84	0.14/0.21	33/38	550
SP102A	1123MST.GN	⊙	115	50/60	0.17/0.16	15/15	2400/2600	78/84	0.14/0.21	33/38	550
SP103A	1123LSL.GN	⊙	115	50/60	0.11/0.13	11/11	2200/2000	76/70	0.12/0.08	38/36	550
SP103A	1123LST.GN	⊙	115	50/60	0.11/0.13	11/11	2200/2000	76/70	0.12/0.08	38/36	550
SP100A	1123XBL.GN	○	115	50/60	0.26/0.24	22/20	2850/3150	97/117	0.34/0.39	45/50	550
SP100A	1123XBT.GN	○	115	50/60	0.26/0.24	22/20	2850/3150	97/117	0.34/0.39	45/50	550
SP101A	1123HBL.GN	○	115	50/60	0.21/0.18	20/18	2750/3050	87/107	0.26/0.32	45/50	550
SP101A	1123HBT.GN	○	115	50/60	0.21/0.18	20/18	2750/3050	87/107	0.26/0.32	45/50	550
SP102A	1123MBL.GN	○	115	50/60	0.17/0.16	16/15	2500/2700	80/88	0.15/0.22	35/40	550
SP102A	1123MBT.GN	○	115	50/60	0.17/0.16	16/15	2500/2700	80/88	0.15/0.22	35/40	550
SP103A	1123LBL.GN	○	115	50/60	0.13/0.11	11/11	2150/2300	72/78	0.09/0.13	37/39	550
SP103A	1123LBT.GN	○	115	50/60	0.13/0.11	11/11	2150/2300	72/78	0.09/0.13	37/39	550

Frame : Aluminum alloy

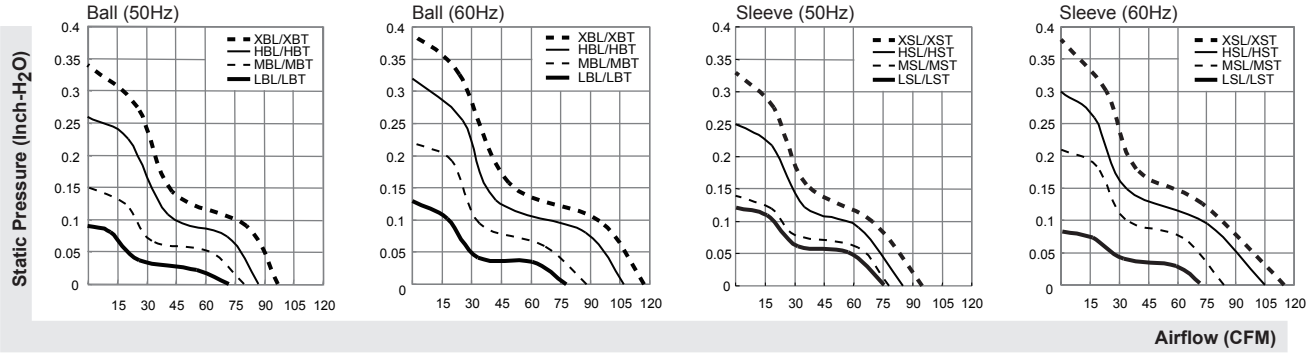

UNITS:mm

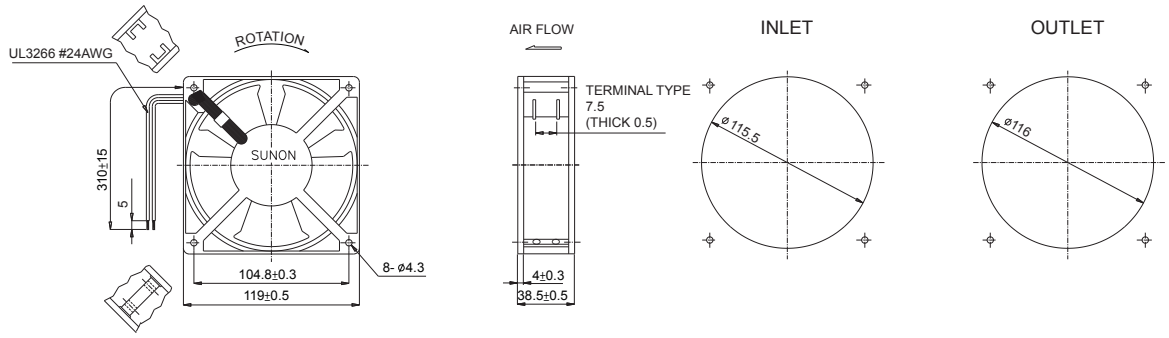

*All model could be customized on voltage or any other requirements to fit your need.
*Specifications subject to change without notice. Please Visit SUNON web site at http://www.sunon.com for update information.

120x120x38 mm

SUNON

70-117CFM

Model	P/N	Bearing ● VAPO ○ BALL ⦿ Sleeve	Rating Voltage (VAC)	Freq. (Hz)	Power Current (AMP)	Power Consumption (WATTS)	Speed (RPM)	Air Flow (CFM)	Static Pressure (Inch-H_2O)	Noise (dBA)	Weight (g)
DP200A	2123XSL.GN	⦿	220-240	50/60	0.14/0.12	22/21	2700/3100	95/115	0.33/0.38	44/49	550
DP200A	2123XST.GN	⦿	220-240	50/60	0.14/0.12	22/21	2700/3100	95/115	0.33/0.38	44/49	550
DP201A	2123HSL.GN	⦿	220-240	50/60	0.125/0.11	20/19	2550/2900	85/105	0.25/0.30	43/48	550
DP201A	2123HST.GN	⦿	220-240	50/60	0.125/0.11	20/19	2550/2900	85/105	0.25/0.30	43/48	550
DP202A	2123MSL.GN	⦿	220-240	50/60	0.09/0.08	16/15	2300/2500	78/84	0.14/0.21	33/38	550
DP202A	2123MST.GN	⦿	220-240	50/60	0.09/0.08	16/15	2300/2500	78/84	0.14/0.21	33/38	550
DP203A	2123LSL.GN	⦿	220-240	50/60	0.06/0.05	11/10	2000/1800	70/63	0.08/0.07	36/32	550
DP203A	2123LST.GN	⦿	220-240	50/60	0.06/0.05	11/10	2000/1800	70/63	0.08/0.07	36/32	550
DP200A	2123XBL.GN	○	220-240	50/60	0.14/0.12	22/21	2850/3150	97/117	0.34/0.39	45/50	550
DP200A	2123XBT.GN	○	220-240	50/60	0.14/0.12	22/21	2850/3150	97/117	0.34/0.39	45/50	550
DP201A	2123HBL.GN	○	220-240	50/60	0.125/0.11	20/19	2750/3050	87/107	0.26/0.32	45/50	550
DP201A	2123HBT.GN	○	220-240	50/60	0.125/0.11	20/19	2750/3050	87/107	0.26/0.32	45/50	550
DP202A	2123MBL.GN	○	220-240	50/60	0.09/0.08	16/15	2400/2600	78/84	0.14/0.21	34/39	550
DP202A	2123MBT.GN	○	220-240	50/60	0.09/0.08	16/15	2400/2600	78/84	0.14/0.21	34/39	550
DP203A	2123LBL.GN	○	220-240	50/60	0.06/0.05	10/10	2150/2300	72/78	0.09/0.13	37/39	550
DP203A	2123LBT.GN	○	220-240	50/60	0.06/0.05	10/10	2150/2300	72/78	0.09/0.13	37/39	550

Frame : Aluminum alloy

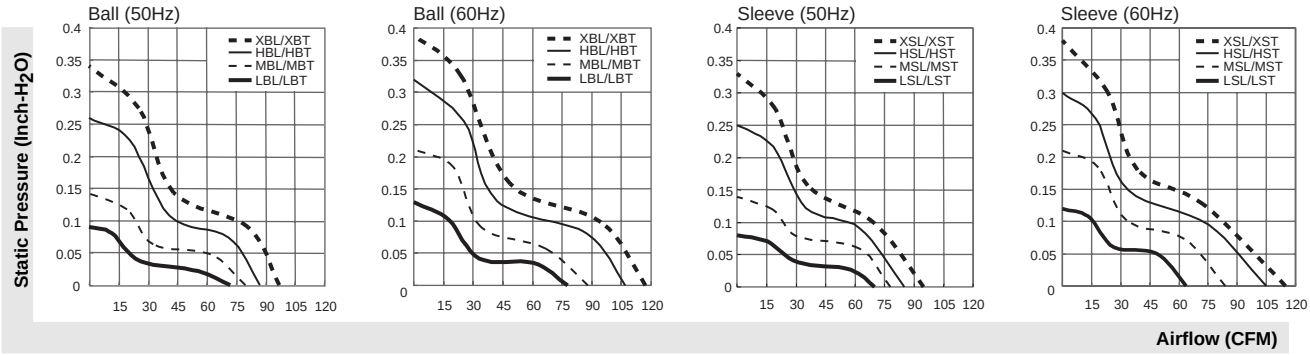

UNITS:mm

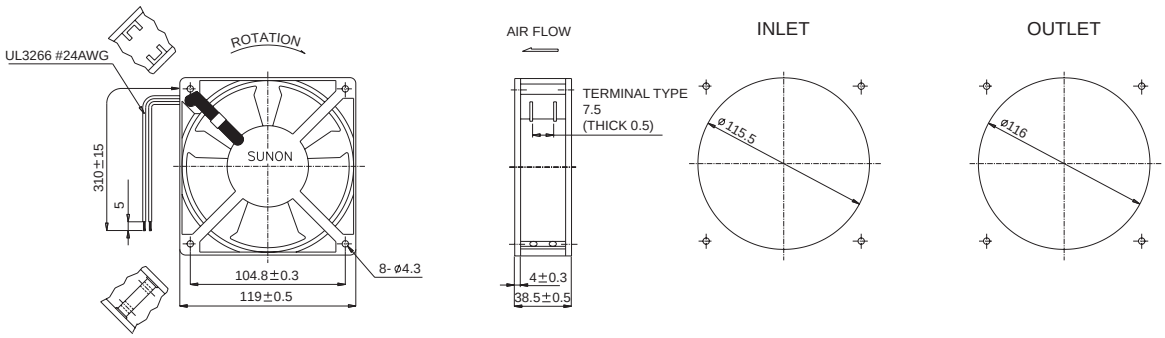

*All model could be customized on voltage or any other requirements to fit your need.
*Specifications subject to change without notice. Please Visit SUNON web site at http://www.sunon.com for update information.

120x120x38 mm

SUNON

85-100 CFM

Model	P/N	Bearing ● VAPO ○ BALL ⦿ Sleeve	Rating Voltage (VAC)	Freq. (Hz)	Power Current (AMP)	Power Consumption (WATTS)	Speed (RPM)	Air Flow (CFM)	Static Pressure (Inch-H_2O)	Noise (dBA)	Weight (g)
SP109WR	1123HST.GN	⦿	115	50/60	0.25/0.22	22/20	2500/2900	85/100	0.28/0.35	41/47	465
SP109WR	1123HSL.GN	⦿	115	50/60	0.25/0.22	22/20	2500/2900	85/100	0.28/0.35	41/47	465
SP109WR	1123HBT.GN	○	115	50/60	0.25/0.22	22/20	2500/2900	85/100	0.25/0.30	42/48	465
SP109WR	1123HBL.GN	○	115	50/60	0.25/0.22	22/20	2500/2900	85/100	0.25/0.30	42/48	465
DP209WR	2123HST.GN	⦿	220-240	50/60	0.13/0.12	22/21	2500/2900	85/100	0.28/0.35	41/47	465
DP209WR	2123HSL.GN	⦿	220-240	50/60	0.13/0.12	22/21	2500/2900	85/100	0.28/0.35	41/47	465
DP209WR	2123HBT.GN	○	220-240	50/60	0.13/0.12	22/21	2500/2900	85/100	0.25/0.30	42/48	465
DP209WR	2123HBL.GN	○	220-240	50/60	0.13/0.12	22/21	2500/2900	85/100	0.25/0.30	42/48	465

Frame : PBT Plastic

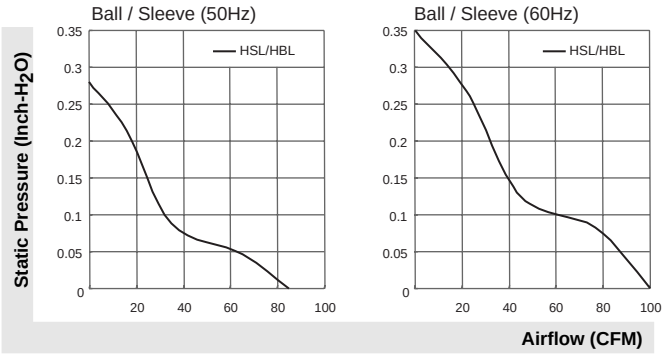

UNITS:mm

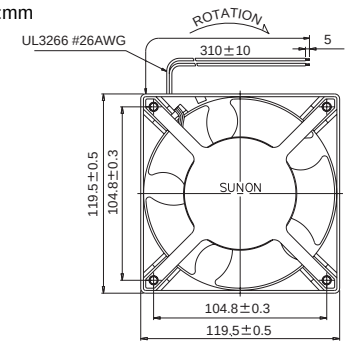

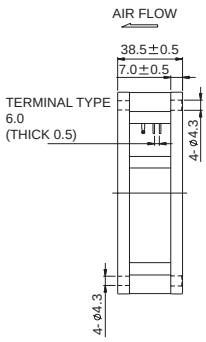

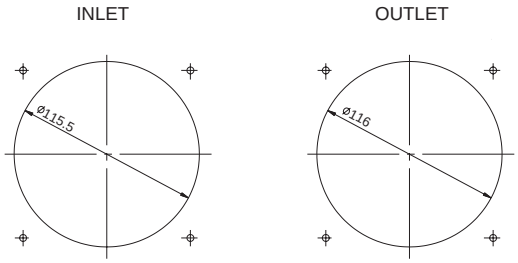

*All model could be customized on voltage or any other requirements to fit your need.
*Specifications subject to change without notice. Please Visit SUNON web site at http://www.sunon.com for update information.

120x120x38 mm

SUNON

95-117 CFM

Model	P/N	Bearing ● VAPO ○ BALL ⊙ Sleeve	Rating Voltage (VAC)	Freq. (Hz)	Power Current (AMP)	Power Consumption (WATTS)	Speed (RPM)	Air Flow (CFM)	Static Pressure (Inch-H_2O)	Noise (dBA)	Weight (g)
A1123-HST	GN	⊙	115	50/60	0.28/0.25	23/20	2700/3100	95/115	0.33/0.38	44/49	525
A1123-HSL	GN	⊙	115	50/60	0.28/0.25	23/20	2700/3100	95/115	0.33/0.38	44/49	525
A1123-HBT	GN	○	115	50/60	0.28/0.25	23/20	2700/3100	97/117	0.34/0.39	45/50	525
A1123-HBL	GN	○	115	50/60	0.28/0.25	23/20	2700/3100	97/117	0.34/0.39	45/50	525
A2123-HST	GN	⊙	220-240	50/60	0.14/0.12	23/20	2700/3100	95/115	0.33/0.38	44/49	525
A2123-HSL	GN	⊙	220-240	50/60	0.14/0.12	23/20	2700/3100	95/115	0.33/0.38	44/49	525
A2123-HBT	GN	○	220-240	50/60	0.14/0.12	23/20	2700/3100	97/117	0.34/0.39	45/50	525
A2123-HBL	GN	○	220-240	50/60	0.14/0.12	23/20	2700/3100	97/117	0.34/0.39	45/50	525

Frame : Aluminum alloy

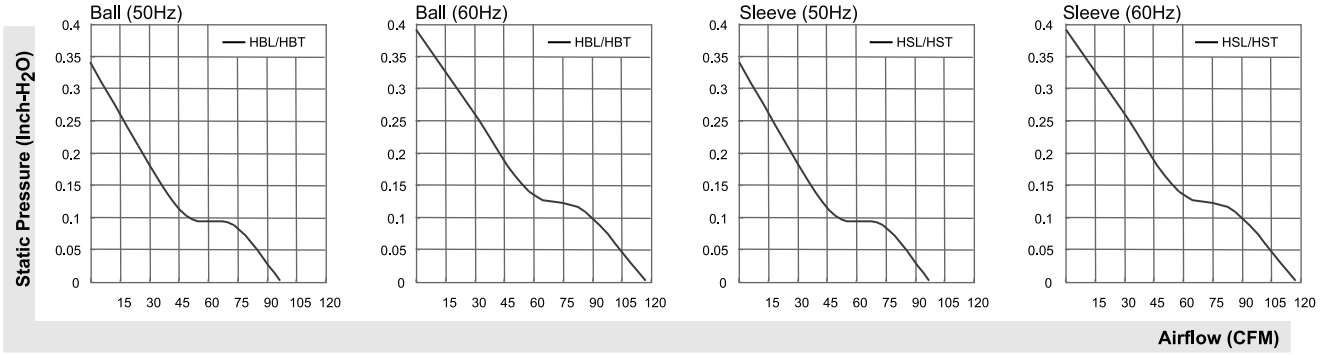

UNITS:mm

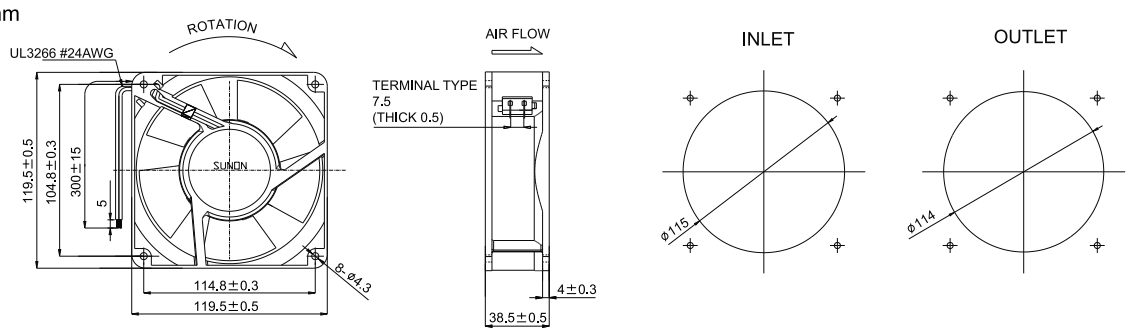

*All model could be customized on voltage or any other requirements to fit your need.
*Specifications subject to change without notice. Please Visit SUNON web site at http://www.sunon.com for update information.

Dual AC Voltage

95-115 CFM

Model	P/N	Bearing ● VAPO ○ BALL ⊙ Sleeve	Rating Voltage (VAC)	Freq. (Hz)	Power Current (AMP)	Power Consumption (WATTS)	Speed (RPM)	Air Flow (CFM)	Static Pressure (Inch-H_2O)	Noise (dBA)	Weight (g)
SF1212AD	SL.GN	⊙	115	50/60	0.27/0.24	21.5/19	2700/3100	95/115	0.33/0.38	44/49	550
			220-240	50/60	0.13/0.12	19.5/19	2700/3100	95/115	0.33/0.38	44/49	550
SF1212AD	BL.GN	○	115	50/60	0.27/0.24	21.5/19	2700/3100	95/115	0.33/0.38	44/49	550
			220-240	50/60	0.13/0.12	19.5/19	2700/3100	95/115	0.33/0.38	44/49	550

Frame : Aluminum alloy

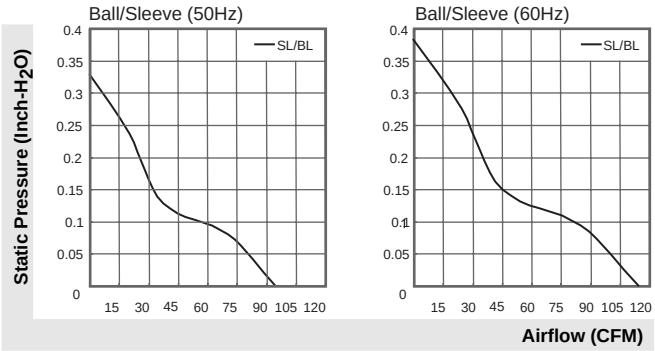

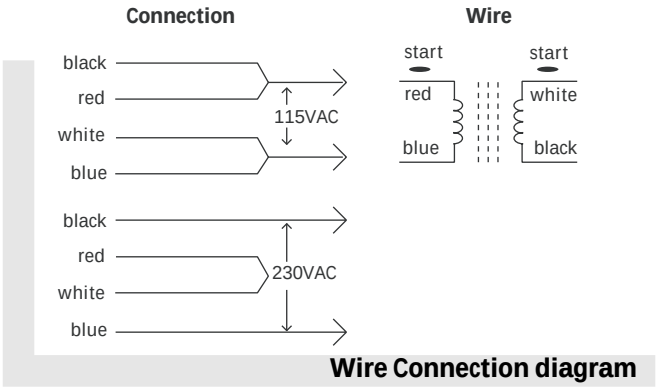

UNITS:mm

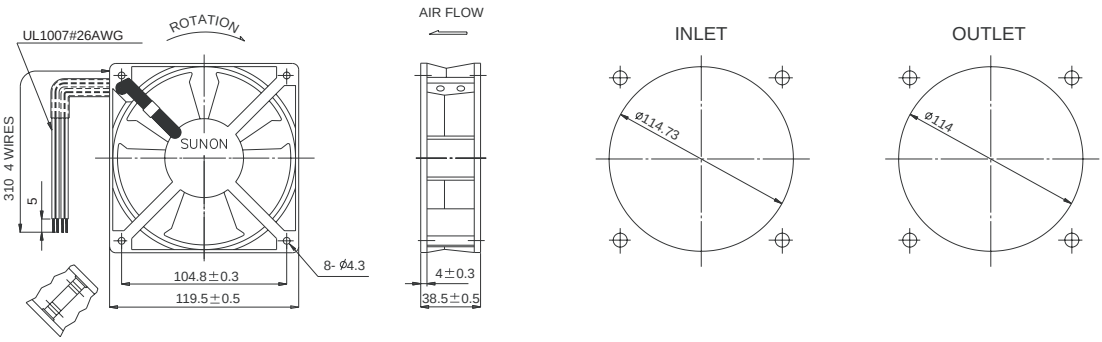

*All model could be customized on voltage or any other requirements to fit your need.
*Specifications subject to change without notice. Please Visit SUNON web site at http://www.sunon.com for update information.

171x151x51 mm

SUNON

180-200 CFM

Model	P/N	Bearing ● VAPO ○ BALL ⦿ Sleeve	Rating Voltage (VAC)	Freq. (Hz)	Power Current (AMP)	Power Consumption (WATTS)	Speed (RPM)	Air Flow (CFM)	Static Pressure (Inch-H_2O)	Noise (dBA)	Weight (g)
A1175-HBL	T.GN	○	115	50/60	0.59/0.48	39/36	2650/2950	180/200	0.48/0.38	52/55	957
A1175-HBT	T.GN	○	115	50/60	0.59/0.48	39/36	2650/2950	180/200	0.48/0.38	52/55	957
A2175-HBL	T.GN	○	220-240	50/60	0.28/0.24	39/36	2650/2950	180/200	0.48/0.38	52/55	957
A2175-HBT	T.GN	○	220-240	50/60	0.28/0.24	39/36	2650/2950	180/200	0.48/0.38	52/55	957

Frame : Aluminum alloy

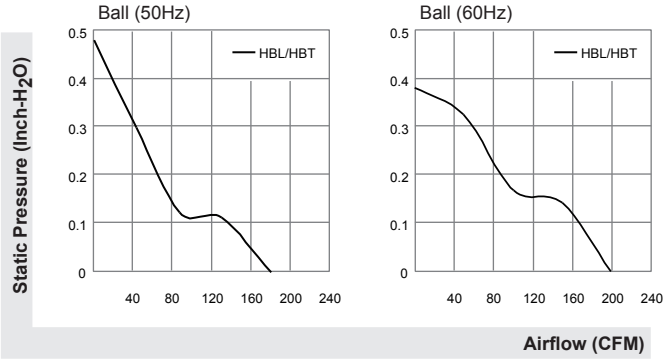

UNITS:mm

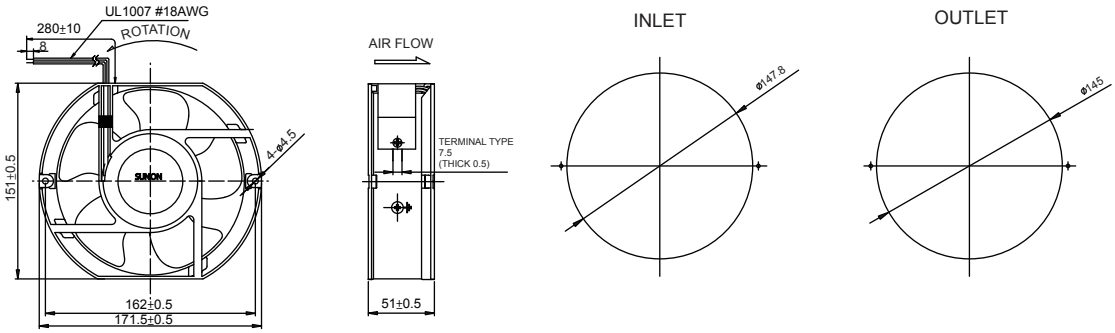

*All model could be customized on voltage or any other requirements to fit your need.
*Specifications subject to change without notice. Please Visit SUNON web site at http://www.sunon.com for update information.

Alveolate Motor

203-239 CFM

Model	P/N	Bearing ● VAPO ○ BALL ⦿ Sleeve	Rating Voltage (VAC)	Freq. (Hz)	Power Current (AMP)	Power Consumption (WATTS)	Speed (RPM)	Air Flow (CFM)	Static Pressure (Inch-H_2O)	Noise (dBA)	Weight (g)
A1175-HBL	TC.GN	○	115	50/60	0.22/0.23	25/27	2800/3200	203/239	0.62/0.69	51/58	908
A1175-HBT	TC.GN	○	115	50/60	0.22/0.23	25/27	2800/3200	203/239	0.62/0.69	51/58	908
A2175-HBL	TC.GN	○	220-240	50/60	0.11/0.11	25/26	2800/3200	203/239	0.62/0.69	51/58	908
A2175-HBT	TC.GN	○	220-240	50/60	0.11/0.11	25/26	2800/3200	203/239	0.62/0.69	51/58	908

Frame : Aluminum alloy

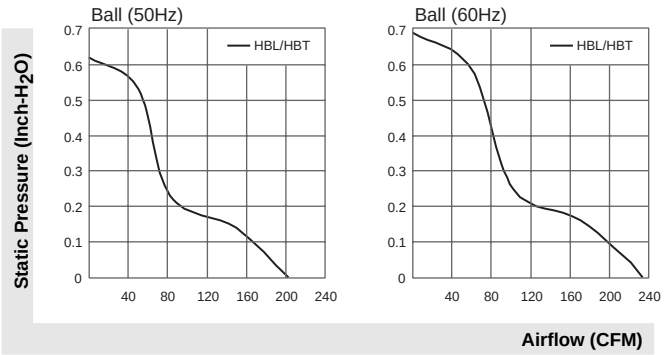

UNITS:mm

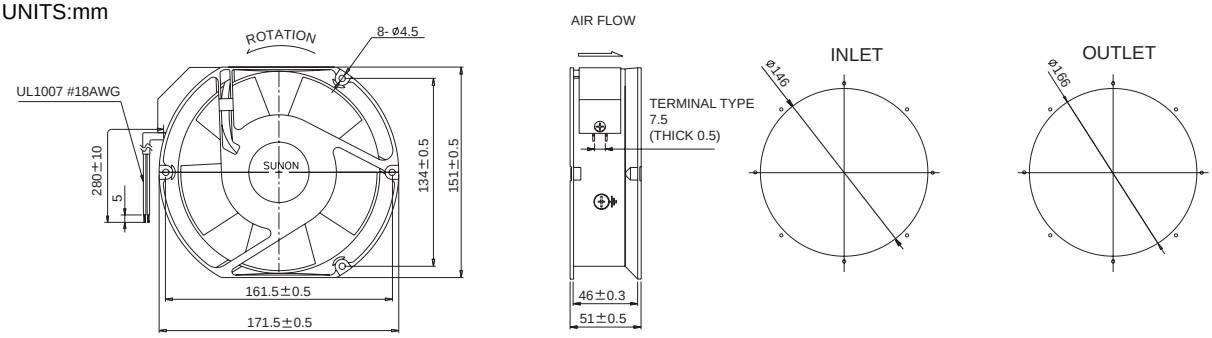

*All model could be customized on voltage or any other requirements to fit your need.
*Specifications subject to change without notice. Please Visit SUNON web site at http://www.sunon.com for update information.

Alveolate Motor

203-239 CFM

Model	P/N	Bearing ● VAPO ○ BALL ⦿ Sleeve	Rating Voltage (VAC)	Freq. (Hz)	Power Current (AMP)	Power Consumption (WATTS)	Speed (RPM)	Air Flow (CFM)	Static Pressure (Inch-H_2O)	Noise (dBA)	Weight (g)
A1175-HBL	TC.R.GN	○	115	50/60	0.22/0.23	25/27	2800/3200	203/239	0.62/0.69	51/58	908
A1175-HBT	TC.R.GN	○	115	50/60	0.22/0.23	25/27	2800/3200	203/239	0.62/0.69	51/58	908
A2175-HBL	TC.R.GN	○	220-240	50/60	0.11/0.11	25/26	2800/3200	203/239	0.62/0.69	51/58	908
A2175-HBT	TC.R.GN	○	220-240	50/60	0.11/0.11	25/26	2800/3200	203/239	0.62/0.69	51/58	908

Frame : Aluminum alloy

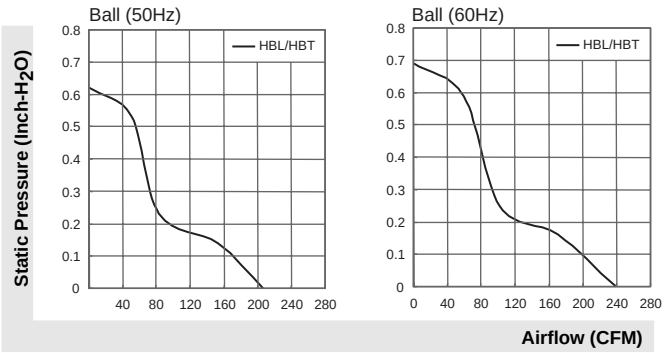

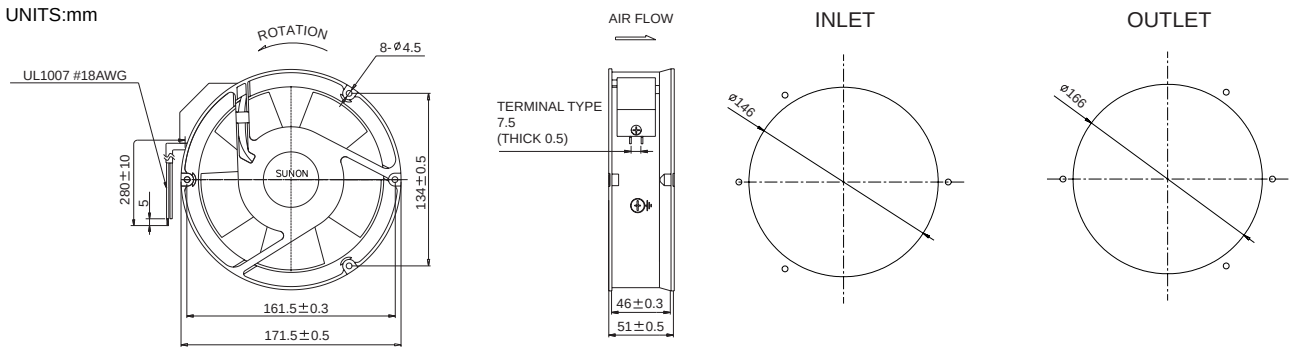

*All model could be customized on voltage or any other requirements to fit your need.
*Specifications subject to change without notice. Please Visit SUNON web site at http://www.sunon.com for update information.

Alveolate Motor

315-335CFM

Model	P/N	Bearing ● VAPO ○ BALL ⦿ Sleeve	Rating Voltage (VAC)	Freq. (Hz)	Power Current (AMP)	Power Consumption (WATTS)	Speed (RPM)	Air Flow (CFM)	Static Pressure (Inch-H_2O)	Noise (dBA)	Weight (g)
A1179-HBT	TC.GN	○	115	50/60	0.25/0.27	24/30	2800/3250	315/335	0.65/0.8	62/66	1960
A1179-HBL	TC.GN	○	115	50/60	0.25/0.27	24/30	2800/3250	315/335	0.65/0.8	62/66	1960
A2179-HBT	TC.GN	○	220-240	50/60	0.11/0.15	23/30	2800/3250	315/335	0.65/0.8	62/66	1960
A2179-HBL	TC.GN	○	220-240	50/60	0.11/0.15	23/30	2800/3250	315/335	0.65/0.8	62/66	1960

Frame : Aluminum alloy

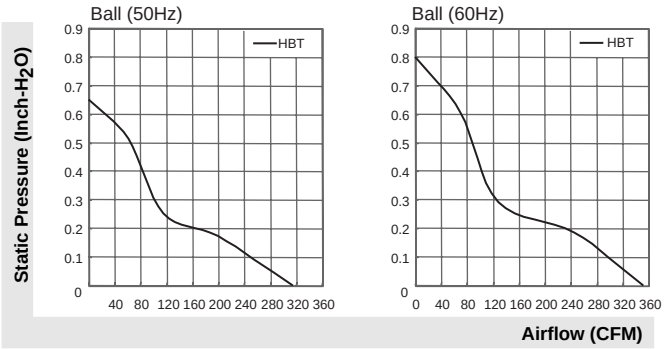

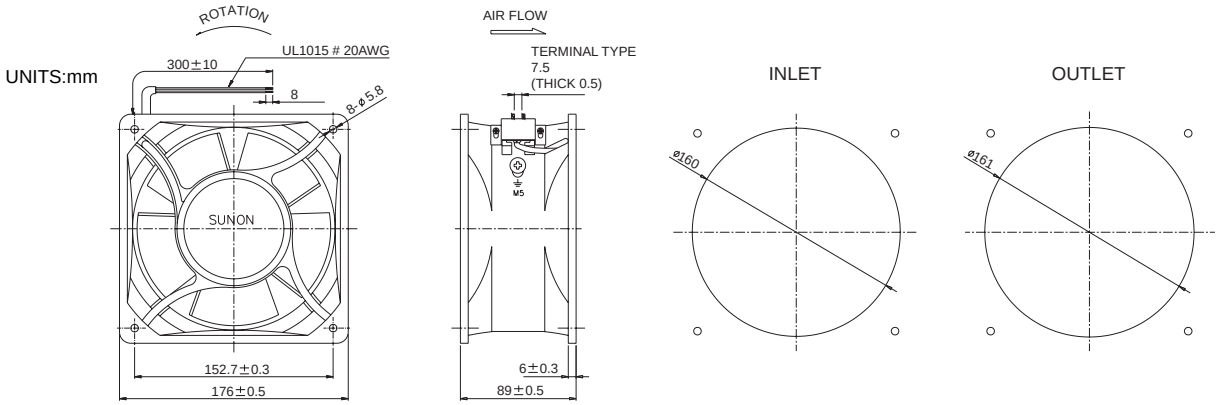

*All model could be customized on voltage or any other requirements to fit your need.
*Specifications subject to change without notice. Please Visit SUNON web site at http://www.sunon.com for update information.

Alveolate Motor

425-870 CFM

Model	P/N	Bearing ● VAPO ○ BALL ⦿ Sleeve	Rating Voltage (VAC)	Freq. (Hz)	Power Current (AMP)	Power Consumption (WATTS)	Speed (RPM)	Air Flow (CFM)	Static Pressure (Inch-H_2O)	Noise (dBA)	Weight (g)
A1259-MBL	TC.N.GN	○	115	50/60	0.23/0.23	20/23	1400/1600	425/500	0.27/0.31	50/52	2300
A1259-MBT	TC.N.GN	○	115	50/60	0.23/0.23	20/23	1400/1600	425/500	0.27/0.31	50/52	2300
A1259-HBL	TC.N.GN	○	115	50/60	0.60/0.65	63/72	2100/1900	650/585	0.35/0.31	62/60	2300
A1259-HBT	TC.N.GN	○	115	50/60	0.60/0.65	63/72	2100/1900	650/585	0.35/0.31	62/60	2300
A1259-XBL	TC.N.GN	○	115	50/60	0.83/1.10	88/120	2600/2900	800/870	0.76/0.62	68/70	2400
A1259-XBT	TC.N.GN	○	115	50/60	0.83/1.10	88/120	2600/2900	800/870	0.76/0.62	68/70	2400
A2259-MBL	TC.N.GN	○	220-240	50/60	0.15/0.13	63/72	1400/1600	425/500	0.27/0.31	50/52	2300
A2259-MBT	TC.N.GN	○	220-240	50/60	0.15/0.13	63/72	1400/1600	425/500	0.27/0.31	50/52	2300
A2259-HBL	TC.N.GN	○	220-240	50/60	0.24/0.27	56/61	2100/1900	650/585	0.35/0.31	62/60	2300
A2259-HBT	TC.N.GN	○	220-240	50/60	0.24/0.27	56/61	2100/1900	650/585	0.35/0.31	62/60	2300

Frame : Aluminum alloy

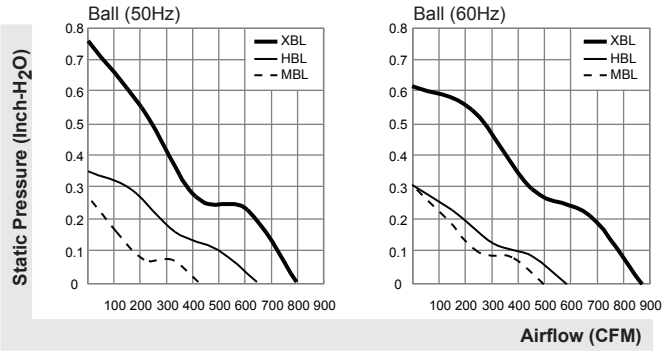

UNITS:mm

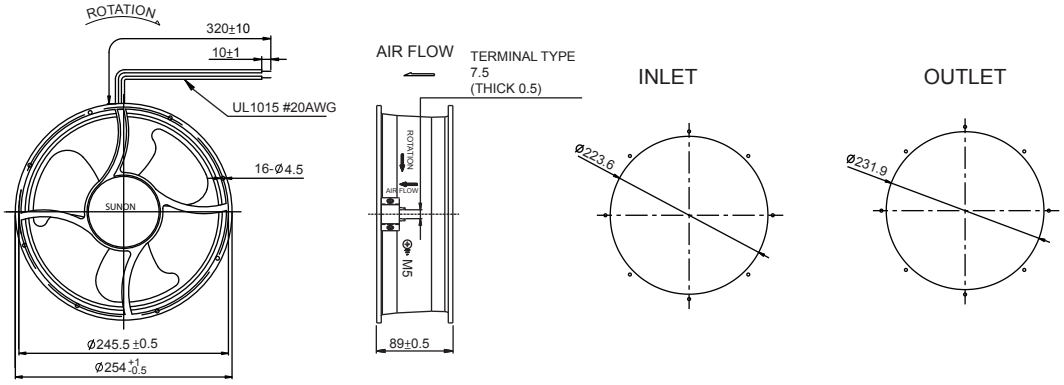

*All model could be customized on voltage or any other requirements to fit your need.
*Specifications subject to change without notice. Please Visit SUNON web site at http://www.sunon.com for update information.

20-22 CFM

Model	P/N	Bearing ● VAPO ○ BALL ⦿ Sleeve	Rating Voltage (VAC)	Freq. (Hz)	Power Current (AMP)	Power Consumption (WATTS)	Speed (RPM)	Air Flow (CFM)	Static Pressure (Inch-H_2O)	Noise (dBA)	Weight (g)
AB1123-HST	GN	⦿	115	50/60	0.25/0.21	20/18	2600/2900	20/22	0.32/0.46	48/50	678
AB1123-HSL	GN	⦿	115	50/60	0.25/0.21	20/18	2600/2900	20/22	0.32/0.46	48/50	678
AB1123-HBT	GN	○	115	50/60	0.25/0.21	20/18	2600/2900	20/22	0.32/0.46	48/50	678
AB1123-HBL	GN	○	115	50/60	0.25/0.21	20/18	2600/2900	20/22	0.32/0.46	48/50	678
AB2123-HST	GN	⦿	220-240	50/60	0.14/0.11	20/18	2600/2900	20/22	0.32/0.46	48/50	678
AB2123-HSL	GN	⦿	220-240	50/60	0.14/0.11	20/18	2600/2900	20/22	0.32/0.46	48/50	678
AB2123-HBT	GN	○	220-240	50/60	0.14/0.11	20/18	2600/2900	20/22	0.32/0.46	48/50	678
AB2123-HBL	GN	○	220-240	50/60	0.14/0.11	20/18	2600/2900	20/22	0.32/0.46	48/50	678

Frame : Aluminum alloy

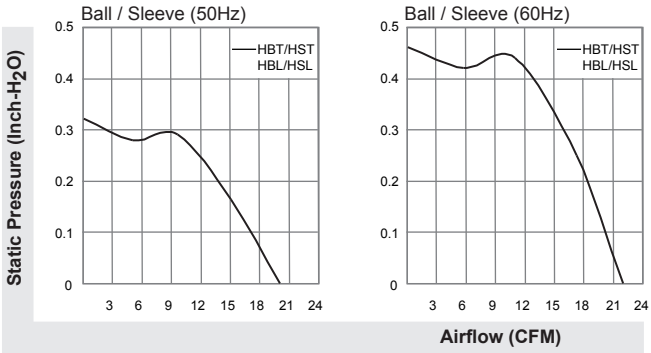

UNITS:mm

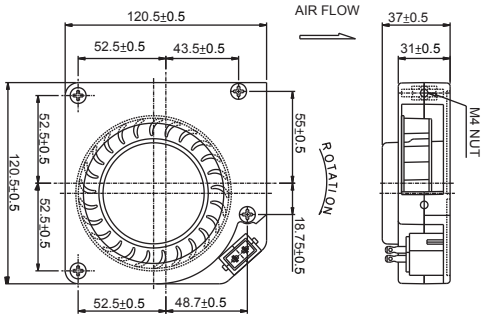

*All model could be customized on voltage or any other requirements to fit your need.
*Specifications subject to change without notice. Please Visit SUNON web site at http://www.sunon.com for update information.

Headquarters:
Sunonwealth Electric Machine Industry Co., Ltd.
No. 30, Lane 296, Hsin Ya Road, Chien-Chen District, Kaohsiung,Taiwan
TEL : +886-7-8135888
FAX :+886-7-8230505/8230606/8231010
URL: http://www.sunon.com
E-mail: sunon@email.sunon.com.tw

Sunon Inc. (U.S.A.)
1075 West Lambert Road Suite A, Brea, California 92821, U.S.A
TEL : +1-714-255-0208
FAX :+ 1-714-255-0802
URL : http://www.sunonusa.com
E-mail : info@sunon.com

Sunon SAS (Europe)
Parc Medicis, 66, Ave Des Pepinieres 94832, Fresnes Cedex-France
TEL : +33-1-46154515
FAX : +33-1-46154510
URL: http://www.sunoneurope.com
E-mail : info@sunoneurope.com

Sunon Corporation (Japan)
Stork Minami Otsuka 4Fl.33-1, 2 Chome,
Minami Otsuka Toshimaku, Tokyo, Japan 170-0005
TEL : +81-3-5395-3069
FAX: +81-3-5395-3080
URL: http://www.sunon.co.jp
E-mail : info@sunon.co.jp

Sunon Technologies Pte Ltd. (Singapore)
10 Toh Guan Road, #03-08 TT International Tradepark, Singapore 608838
TEL : +65-6795-0300
FAX :+65-6795-0600
E-mail : info@sunon.com.sg

Sunonwealth Electric Machine Industry (HK) Ltd. (Hong Kong)
1906 Nan Fung Center, 264 Castle Peak Road, Tsuen Wan, Hong Kong
TEL : + 852-24-111-388
FAX : + 852-24-050-707
E-mail : info@sunon.com.hk

Sunon Shanghai Office (Shanghai, China)
TEL : +86-021-54070116
FAX :+86-021-54070116
URL: http://www.sunon.com.cn

Sunon Shen Zhen Office (Shen Zhen, China)
TEL : +86-755-26880688
FAX :+86-755-26880288
E-mail : info@sunon.com.cn

Sunon Guangzhou Office (Guangzhou, China)
TEL : +86-20-87788928
FAX :+86-20-87786786

All rights reserved. SUNON is registered trademarks of SUNONWEALTH Electric Machine Industry Co., Ltd. ©2006 SUNONWEALTH Electric Machine Industry Co., Ltd.

2006/08/20 (114-3)